INSTRUCTIONS:

Important: For proper form functionality, please use Adobe Acrobat Reader or Internet Explorer when viewing this form.

1) To begin, please download this document and save it to your computer.
2) Open the saved document in Adobe Acrobat Reader or Internet Explorer to see the blue fillable fields.
3) Use the mouse to click and select each blue field and enter your appropriate measurements and information. You can also tab from one field to another.
4) When all information is completed, select the blue button for "Send Specifications" at the bottom of the form. Follow the instructions in the popup window to submit your form via email.
5) If you have trouble sending your specifications, save the completed form and send it as an email attachment to us at shotsleeves@yahoo.com.

PRECISION TOOL COMPANY

PLUNGER TIP

ORDER/SPECIFICATION SHEET

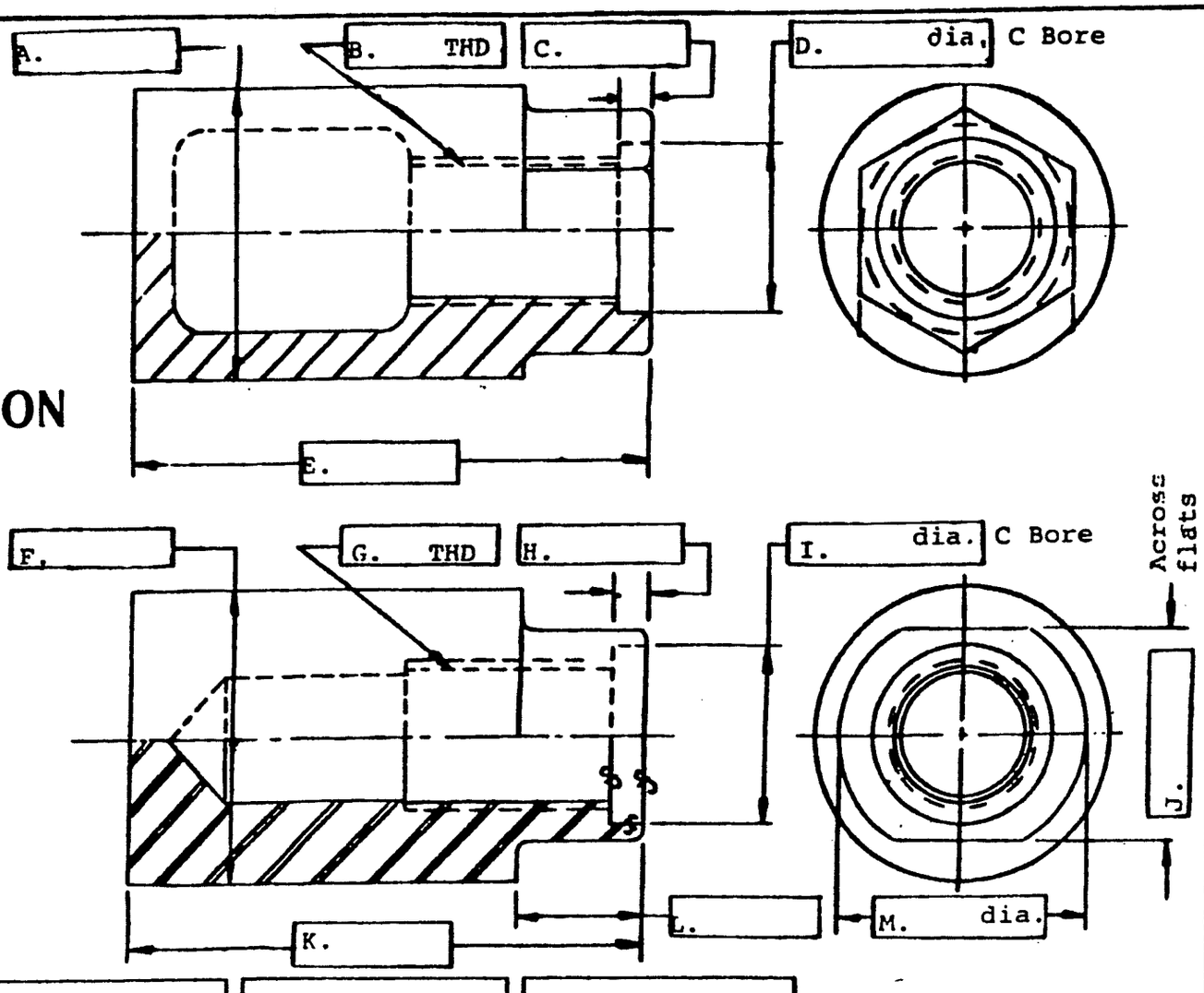

QUANTITY .	ORDER NO.	
Company		
Address:		
City:	State:	Zip:
Phone:	Date:	
By:		

MATERIAL SPECIFICATION

- ☐ H-13 STEEL Heat Treated Only
- ☐ H-13 STEEL Heat Treated & Nitrided

MACHINE INFORMATION

Name:

Model:

Tonnage:

PRECISION TOOL COMPANY
875 Kingsland Ave.
St. Louis, MO 63130
800-553-2023
314-721-2899
Fax: 314-721-4432
shotsleeves@yahoo.com

Save | Send Specifications